

FEATURES

- ●100% full load burn-in test
- ●Universal AC input
- ●Small size and high efficiency
- ●Conform to EMC EN5502 GB9254
- ●Built-in EMI filter with tiny ripple
- ●Comply with the safety standards UL60950 GB4943 EN60850
- ●Protection: short circuit/over Voltage/over/load temperature

MODEL		12V 35W	24V 35W
OUTPUT	DC VOLTAGE	12V	24V
	RATED CURRENT	1.25A	1.46A
	CURRENT RANGE	0~1.25A	0~1.46A
	RATED POWER	15W	15W
	RIPPLE& NOISE (MAX.)	150mV	150mV
	VOLTAGE TOLERANCE	±1%	±1%
	SETUP , RISE TIME	500ms, 30ms/230VAC 1200ms,30ms/115VAC at full load	
	HOLD UP TIME(Typ.)	50ms/230VAC 10ms/115VAC at full load	
INPUT	VOLTAGE RANGE	85 ~ 264VAC	
	FREQUENCY RANGE	47~63Hz	
	POWER FACTOR(Typ.)	PF>0.6/220VAC	
	EFFICIENCY(Typ.)	85%	86%
	AC CURRENT(Typ.)	0.75A/115VAC 0.5A/230VAC	
	INRUSH CURRENT(Typ.)	cold start 45A/230V	
	SHORT CIRCUIT	protection type: recovers automatically after fault condition is removed	
PROTECTION	OVER LOAD	105~135% hiccup mode, auto-recovery	
	DC ADJ. RANGE	±10% rated output voltage	
ENVIRONMENT	WORKING TEMP	–40°C~+60°C (no frost)	
	WORKING HUMIDITY	20%~90%RH	
	STORAGE TEMP , HUMIDITY	–40°C~85°C/10%~95%RH	
SAFETY&EMC	SAFETY STANDARDS	CE ROHS	
	WITHSTAND VOLTAGE	I/P-O/P: 1.5KVAC/1min, I/P-F/G: 1.5KVAC/1min, O/P-F/G: 0.5KVAC/1min	
	EMC TESTING STANDARD	EN55015:2006; EN61547:1995+A1:2000;EN61000 -3-2:2006	
		EN61000-3-3:1995+A2:2005;EN61347 -3-13:2006	

Tel: 086 755 2306 0905 Fax: 086 755 2304 1269 Website: www.smpspower.com

Add: 5th Floor, B3 Building, Huafeng Shiji Industrial park, Hangcheng Road, Xixiang, Bao'an district, Shenzhen P.R.C.

Mechanical Specification

Terminal Assignment

Pin No.	Assignment	Pin No.	Assignment
1	AC/L	4	DC OUTPUT-V
2	AC/N	5	DC OUTPUT+V
3	FG		
Dimension: 85*58*30 mm		Carton size: 350*220*275 mm	
Carton Quantity: 72PCS/Carton		Weight: 0.14kg/PCS	

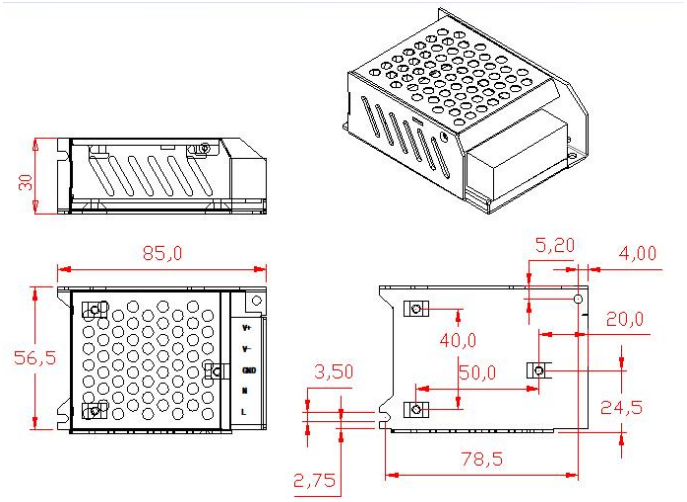

Derating Curve	Static Characteristics(12V)
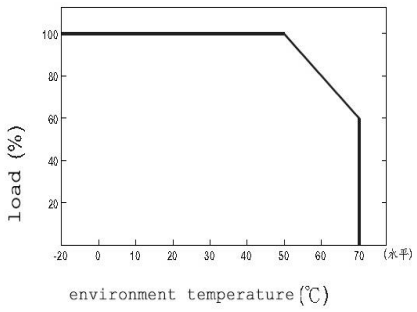	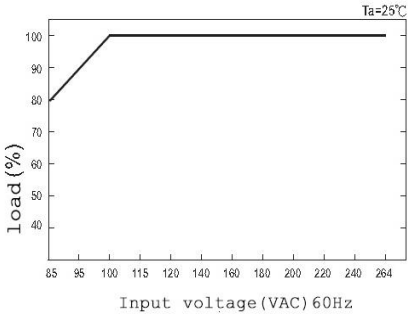

REMARKS:

1, The above mentioned data were measured at 230VAC input and 25°C.
2, Ripple & noise are measured at 20MHz of bandwidth by using a 12" twisted pair-wire terminated with a 0.1uf & 47uf parallel capacitor.
3, Cut the AC input before checking any mal-phenomenons.
4, Make sure the INPUT&OUPUT were in right situation before connected to power supply.
5, Be ware of high power pressure may caused by short circut when installing metal casing products.
6, Please contact us at info@smpspower.com for further solution if any unforeable problem happens.

Tel: 086 755 2306 0905 Fax: 086 755 2304 1269 Website: www.smpspower.com

Add: 5th Floor, B3 Building, Huafeng Shiji Industrial park, Hangcheng Road, Xixiang, Bao'an district, Shenzhen P.R.C.