

**FEATURES**

- ●100% full load burn-in test
- ●Universal AC input
- ●Small size and high efficiency
- ●Conform to EMC EN5502 GB9254
- ●Built-in EMI filter with tiny ripple
- ●Comply with the safety standards UL60950 GB4943 EN60850
- ●Protection: short circuit/over Voltage/over/load temperature

| MODEL | | 12V 250W | 24V 250W |
|---|---|---|---|
| OUTPUT | DC VOLTAGE | 12V | 24V |
| | RATED CURRENT | 20A | 10A |
| | CURRENT RANGE | 0~16.5A | 0~8.3A |
| | RATED POWER | 250W | 250W |
| | RIPPLE& NOISE (MAX.) | 120mVp-p | 120mVp-p |
| | VOLTAGE TOLERANCE | ±1% | ±1% |
| | SETUP , RISE TIME | 1000ms, 50ms/230VAC 1000ms,50ms/115VAC at full load | |
| | HOLD UP TIME(Typ.) | 20ms/230VAC 16ms/115VAC at full load | |
| INPUT | VOLTAGE RANGE | 85~132VAC/170~264VAC | |
| | FREQUENCY RANGE | 47~63Hz | |
| | POWER FACTOR(Typ.) | PF>0.6/220VAC | |
| | EFFICIENCY(Typ.) | 85% | 86% |
| | AC CURRENT(Typ.) | 4.5A/115VAC 2.5A/230VAC | |
| | INRUSH CURRENT(Typ.) | 40A/115VAC 55A/230VAC | |
| | SHORT CIRCUIT | protection type: recovers automatically after fault condition is removed | |
| PROTECTION | OVER LOAD | 105~135% hiccup mode , auto-recovery | |
| | DC ADJ. RANGE | 115%~135% Cut off the output , auto-recovery | |
| ENVIRONMENT | WORKING TEMP | -20℃~ +60℃ | |
| | WORKING HUMIDITY | 20%~90%RH | |
| | STORAGE TEMP , HUMIDITY | -40℃~+85℃,10%~90%RH | |
| SAFETY&EMC | SAFETY STANDARDS | CE,ROHS | |
| | WITHSTAND VOLTAGE | I/P-O/P:1.5KVAC I/P-FG:1.5KVAC O/P-FG:0.5KVAC | |
| | safety standard | GB4943 ;IEC60950-1;EN62368-1 | |
| | EMC TESTING STANDARD | EN55032 | |

Tel: 086 755 2306 0905 Fax: 086 755 2304 1269 Website: www.smpspower.com

Add: 5th Floor, B3 Building, Huafeng Shiji Industrial park, Hangcheng Road, Xixiang, Bao'an district, Shenzhen P.R.C.

## Mechanical Specification

Terminal Assignment

| Pin No. | Assignment | Pin No. | Assignment |
|---|---|---|---|
| 1 | AC/L | 4.5.6 | DC OUTPUT-V |
| 2 | AC/N | 7.8.9 | DC OUTPUT+V |
| 3 | FG | | |
| | | | |
| Dimension: 160*98*40 mm | | Carton size: 395*357*235 mm | |
| Carton Quantity: 32PCS/Carton | | Weight: 0.51kg/PCS | |

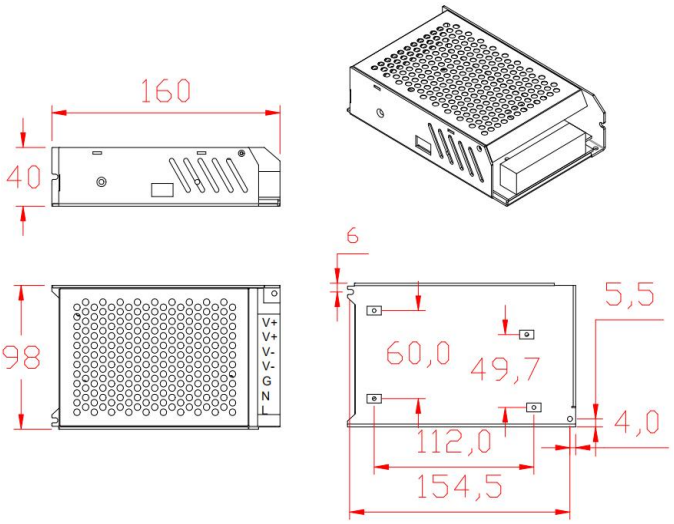


| Derating Curve | Static Characteristics(12V) |
|---|---|
| 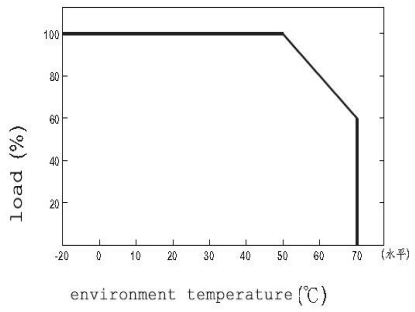 | 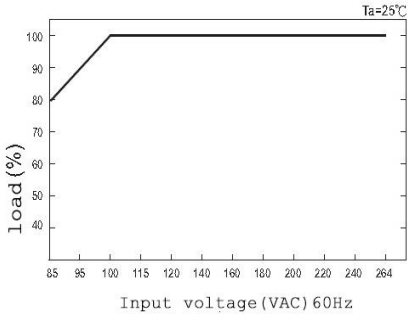 |



REMARKS:

1, The above mentioned data were measured at 230VAC input and 25°C.
2, Ripple & noise are measured at 20MHz of bandwidth by using a 12" twisted pair-wire terminated with a 0.1uf & 47uf parallel capacitor.
3, Cut the AC input before checking any mal-phenomenons.
4, Make sure the INPUT&OUPUT were in right situation before connected to power supply.
5, Be ware of high power pressure may caused by short circut when installing metal casing products.
6, Please contact us at info@smpspower.com for further solution if any unforeable problem happens.

Tel: 086 755 2306 0905 Fax: 086 755 2304 1269 Website: www.smpspower.com

Add: 5th Floor, B3 Building, Huafeng Shiji Industrial park, Hangcheng Road, Xixiang, Bao'an district, Shenzhen P.R.C.