SWITCHING POWER SUPPLY

100W@12V | 100W@24V | 100W@48V

SANPU



SELV CE IP20

Features:

- 100-240V AC input
- Single Output
- 85% high efficiency
- 100% full load bur-in test
- Protection: OTP,OLP,OVP,SCP
- CE ROHS Certified
- 3 year warranty

Applications:

- Indoor LED lighting
- LED office lighting
- LED commercial lighting
- LED decorative lighting

Specifications

Product Code		CPS100-W1V12	CPS100-W1V24	CPS100-W1V48
Output	DC Voltage	12V	24V	48V
	Rated Current	8.3A	4.16A	2.08A
	Current Range	0~8.3A	0~4.16A	0~2.08A
	Voltage tolerance	±5%	±5%	±5%
	Rated Power	100W	100W	100W
	Ripple & Noise	<120mVp-p	<120mVp-p	<120mVp-p
	Set-up, Rise Time	1500ms, 30ms / 230VAC		
Input	Input voltage range	100-240 VAC		
	Frequency Range	50~60Hz		
	AC Current	1.83A/115VAC 0.87A/230VAC		
	Efficiency	85%	88%	88%
	PF	0.6		
Protection	Over Load	**Above 110%-150% of rated power**		
		Shut-down output voltage, auto recovery after fault condition is removed		
	Over Voltage	**Above Max. Voltage (105% of rated voltage)**		
		Shut-down output voltage, auto recovery after fault condition is removed		
	Over Temperature	**Over 130°C detected on main IC control**		
		Shut-down output voltage, auto recovery after fault condition is removed		
Ambiant	Working Temp. & humidity	"-20°C~+60°C, 20%~90%RH		
	Storage temp. & humidity	"-40°C~+85°C, 10%~95%RH		
Tesings	Withstand voltage	I/P-O/P: 1.5KVAC/1min; I/P-F/G: 1.5KVAC/1min;O/P-F/G: 0.5KVAC/1min;		
	Safety	GB4943 ;IEC60950-1; EN60950-1		
	EMC	EN 55032:2015+A11:2020 EN IEC 61000-3-2:2019+A1:2021 EN 61000-3-3:2013+A2:2021 EN55035:2017+A11:2020		
	LVD	EN60950-1:2006+A11:2009+A1:2010+A12:2011+A2:2013		
Others	Demension(L*W*H)	134*97*28.6mm		
	Packing	0.29kg/pcs, 42pcs/13kg/CTN		

Mechanical Structures

■Vertical view

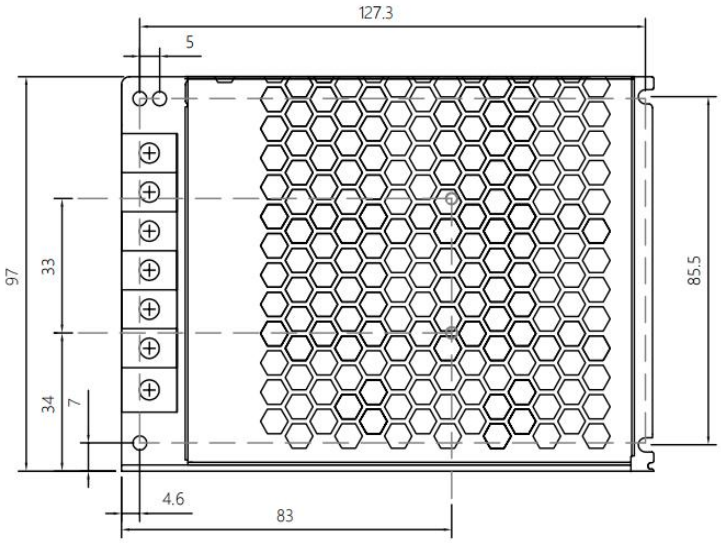

■Side View

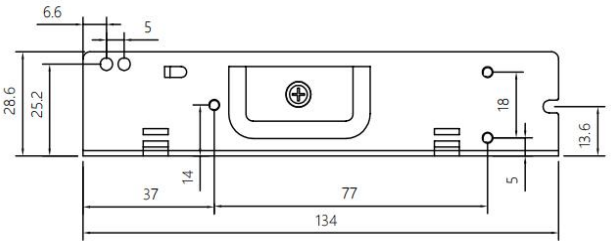

Wiring Diagram

Without Dimming

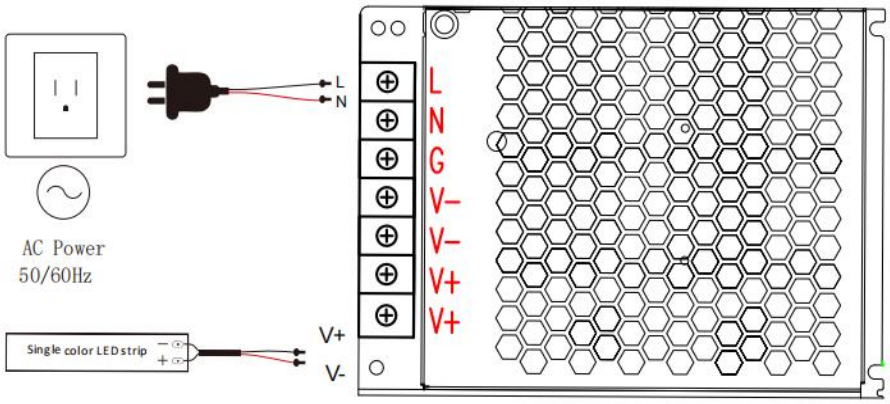

■Derating Curve

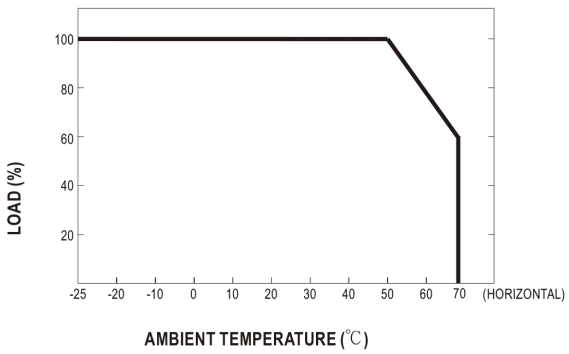

■Static Characteristics

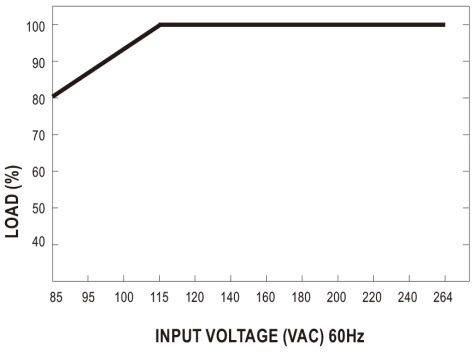

Notes:

1. The above mentioned data were measured at 230VAC input and 25°C.
2. Dis-connect the AC input before checking any mal-phenomenons.
3. Make sure the INPUT&OUPUT were in right situation before connected to power supply.
4. Datesheet for reference only. We suggest you take sampling before mass orders.